Dual-PD PCA4540

Dual Photodiodes

PCA4540 is a dual-element Si photodiode which is moulded into a small plastic leadless optical package. Produced as one chip, the photodiodes offer a very good symmetry, low dark current and high sensitivity.

FEATURES

- Low dark current
- High sensitivity
- Small surface mounting type

TYPICAL APPLICATIONS

- Position sensors
- Differential light measurement
- Auto focus

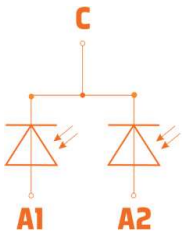

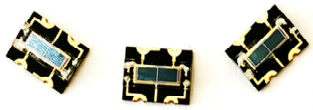

KEY CHARACTERISTICS

Parameter	Value	Unit
Photodiode size	(2) 1.6 x 1.0	mm
Peak wavelength	850	nm
Dark current @30°C,Vr=2V	1.0	nA

DIMENSIONS

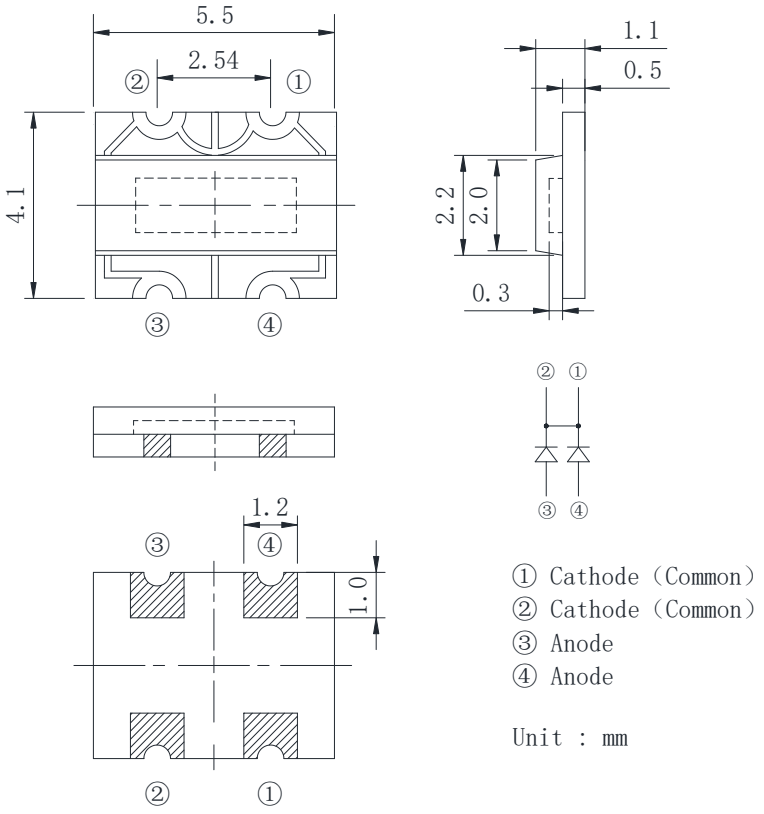

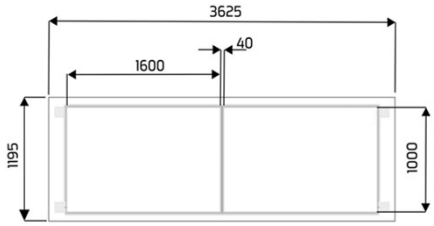

© PREMA

Dual PDs PCA4540

Dual Photodiodes

ABSOLUTE MAXIMUM RATINGS (Ta=25°C)

Parameter	Symbol	Min	Max	Unit
Soldering temperature	T_{sol}		260	°C
Storage Temperature	T_{stg}	-30	90	°C
Operating Temperature	T_{opr}	-20	80	°C

ELECTRO-OPTICAL CHARACTERISTICS (Ta=25°C)

Symbol	Parameter	Conditions	Min	Typ	Max	Unit
A_{pd}	Active area	A1, A2 width height		1.60 1.00		mm
λ	Spectral response range		400		1100	nm
$λ_{peak}$	Peak sensitivity wavelength			850		nm
I_{sc}	Short circuit current	EV = 1,000 Lx *1		17		μA
S_{peak}	Peak sensitivity			0.55		A/W
I_d	Dark current	C1, C2 Vr=10V			20	nA
C_j	Junction capacitance	C1, C2 Vr=10V		20		pF
Δθ	Half angle			65		deg

*1. Under tungsten lamp of color temp. = 2856K

SPECTRAL SENSITIVITY

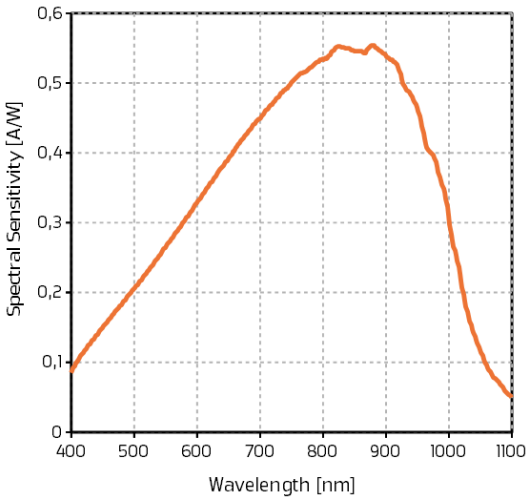

© PREMA

Disclaimer

Information provided by PREMA is believed to be accurate and correct. However, no responsibility is assumed by PREMA for its use, nor for any infringements of patents or other rights of third parties which may result from its use. PREMA reserves the right at any time without notice to change circuitry and specifications.

Life Support Policy

PREMA products are not authorized for use as critical components in life support devices or systems without the express written approval of PREMA. As used here in:

1. Life support devices or systems are devices or systems which, (a) are intended for surgical implant into the body, or (b) support or sustain life, and whose failure to perform when properly used in accordance with instructions for use provided in the labeling,can be reasonably expected to result in a significant injury to the user.
2. A critical component is any component of a life support device or system whose failure to perform can be reasonably expected to cause the failure of the life support device or system,or to affect its safety or effectiveness.

PREMA Semiconductor GmbH
Addr: Robert-Bosch-Strasse 6 D-55129 Mainz Deutschland
TEL: +49 6131 50620
E-mail: prema@prema.com

普芮玛光电技术（江苏）有限公司
Addr: 苏州工业园区金鸡湖大道99号苏州纳米城 NW01-609
TEL: +86 0512-6767 8738
E-mail: prema@prema.com.cn

www.prema.com
www.prema.com.cn

© PREMA